GeoMFormer: A General Architecture for Geometric Molecular Representation Learning

Tianlang Chen[1]*, Shengjie Luo[1]*, Di He[1], Shuxin Zheng[2], Tie-Yan Liu[2], Liwei Wang[1]

1. Peking University; 2. Microsoft Research AI4Science

Background

Molecular Representation Learning

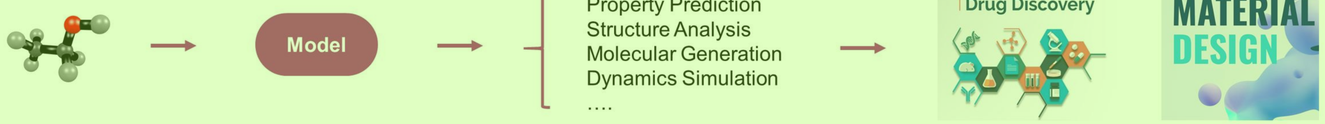

Invariant and Equivariant

GeoMFormer

Overview

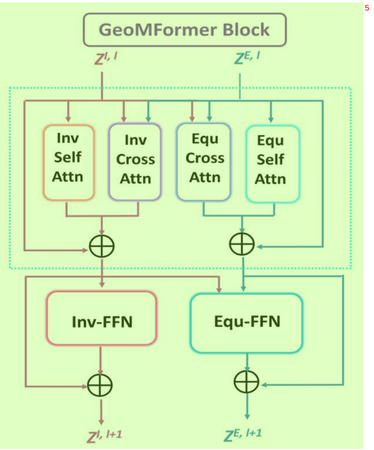

- **Goal of design**: Devise a framework that performs well on both invariant and equivariant tasks in real-world applications.
- **Key to the Design**: Simultaneously and comprehensively model interatomic interactions within and across feature spaces in a unified manner.

$$\textit{Invariant Stream}\begin{cases} \mathbf{Z}'^{I,l} &= \mathbf{Z}^{I,l} + \text{Inv-Self-Attn}(\mathbf{Q}^{I,l},\mathbf{K}^{I,l},\mathbf{V}^{I,l}) \\ \mathbf{Z}''^{I,l} &= \mathbf{Z}'^{I,l} + \text{Inv-Cross-Attn}(\mathbf{Q}^{I,l},\mathbf{K}^{I_E,l},\mathbf{V}^{I_E,l}) \\ \mathbf{Z}^{I,l+1} &= \mathbf{Z}''^{I,l} + \text{Inv-FFN}(\mathbf{Z}''^{I,l}) \end{cases}$$

$$\textit{Equivariant Stream}\begin{cases} \mathbf{Z}'^{E,l} &= \mathbf{Z}^{E,l} + \text{Equ-Self-Attn}(\mathbf{Q}^{E,l},\mathbf{K}^{E,l},\mathbf{V}^{E,l}) \\ \mathbf{Z}''^{E,l} &= \mathbf{Z}'^{E,l} + \text{Equ-Cross-Attn}(\mathbf{Q}^{E,l},\mathbf{K}^{E_I,l},\mathbf{V}^{E_I,l}) \\ \mathbf{Z}^{E,l+1} &= \mathbf{Z}''^{E,l} + \text{Equ-FFN}(\mathbf{Z}''^{E,l}) \end{cases}$$

Instantiation

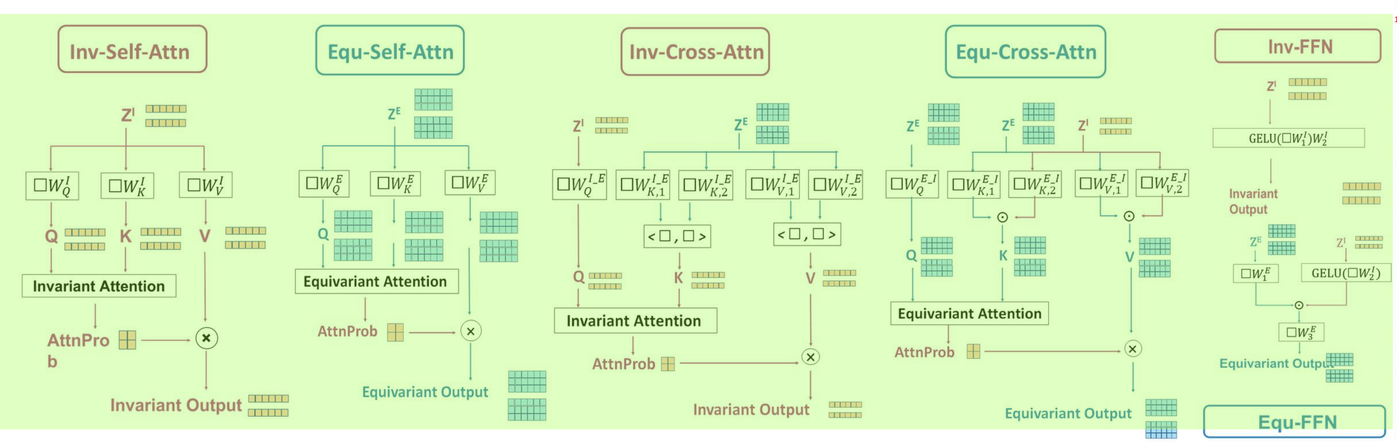

Experiments

Invariant: OC20 IS2RE (Energy Prediction)

Table 2. Results on OC20 IS2RE val set. We report the official results of baselines from the original paper. Bold values denote the best.

Model	Energy MAE (eV) ↓ ID	OOD Ads.	OOD Cat.	OOD Both	Average	EwT (%) ↑ ID	OOD Ads.	OOD Cat.	OOD Both	Average
CGCNN (Xie & Grossman, 2018)	0.6203	0.7426	0.6001	0.6708	0.6585	3.36	2.11	3.53	2.29	2.82
SchNet (Schütt et al., 2018)	0.6465	0.7074	0.6475	0.6626	0.6660	2.96	2.22	3.03	2.38	2.65
DimeNet++ (Gasteiger et al., 2020a)	0.5636	0.7127	0.5612	0.6492	0.6217	4.25	2.48	4.4	2.56	3.42
GemNet-T (Gasteiger et al., 2021)	0.5561	0.7342	0.5659	0.6964	0.6382	4.51	2.24	4.37	2.38	3.38
SphereNet (Liu et al., 2022b)	0.5632	0.6682	0.5590	0.6190	0.6024	4.56	2.70	4.59	2.70	3.64
Graphormer-3D (Shi et al., 2022)	0.4329	0.5850	0.4441	0.5299	0.4980	-	-	-	-	-
GNS (Pfaff et al., 2020)	0.47	0.51	0.48	0.46	0.4800	-	-	-	-	-
Equiformer (Liao & Smidt, 2023)	0.4156	0.4976	0.4165	0.4344	0.4410	7.47	4.64	7.19	4.84	6.04
GeoMFormer (ours)	**0.3883**	**0.4562**	**0.4037**	**0.4083**	**0.4141**	**11.26**	**6.70**	**9.97**	**6.42**	**8.59**

Equivariant: OC20 IS2RS (Structure Prediction)

Table 3. Results on OC20 IS2RS validation set. All models are trained and evaluated under the direct prediction setting. Bold values indicate the best.

Model	ADwT (%) ↑ ID	OOD Ads	OOD Cat	OOD Both	Average
PaiNN (Schütt et al., 2021)	3.29	2.37	3.10	2.33	2.77
TorchMD-Net (Thölke & De Fabritiis, 2022)	3.32	3.35	2.94	2.89	3.13
Spinconv (Shuaibi et al., 2021)	5.81	4.88	5.63	4.84	5.29
GemNet-dT (Gasteiger et al., 2021)	6.87	7.10	6.03	7.08	6.77
GemNet-OC (Gasteiger et al., 2022)	11.31	**12.20**	4.40	5.55	8.36
GeoMFormer (ours)	**11.45**	10.52	**9.94**	**10.78**	**10.67**

Invariant: Molecule3D (Property Prediction)

Table 5. Results on Molecule3D for both random and scaffold splits. We report the official results of baselines. Bold values denote the best.

Model	MAE ↓ Random	Scaffold
GIN-Virtual (Hu et al., 2021)	0.1036	0.2371
SchNet (Schütt et al., 2018)	0.0428	0.1511
DimeNet++ (Gasteiger et al., 2020a)	0.0306	0.1214
SphereNet (Liu et al., 2022b)	0.0301	0.1182
ComENet (Wang et al., 2022)	0.0326	0.1273
PaiNN (Schütt et al., 2021)	0.0311	0.1208
TorchMD-Net (Thölke & De Fabritiis, 2022)	0.0303	0.1196
GeoMFormer (ours)	**0.0252**	**0.1045**

Invariant: PCQM4Mv2 (Property Prediction)

Table 4. Results on PCQM4Mv2. The evaluation metric is the Mean Absolute Error (MAE). We report the official results of baselines. ∗ indicates the best performance achieved by models with the same complexity (n denotes the number of atoms).

Model	Complexity	Valid MAE ↓
MLP-Fingerprint (Hu et al., 2021)	$\mathcal{O}(n)$	0.1735
GINE-$_{VN}$ (Brossard et al., 2020; Gilmer et al., 2017)		0.1167
GCN-$_{VN}$ (Kipf & Welling, 2017; Gilmer et al., 2017)		0.1153
GIN-$_{VN}$ (Xu et al., 2019; Gilmer et al., 2017)		0.1083
DeeperGCN-$_{VN}$ (Li et al., 2020; Gilmer et al., 2017)		0.1021*
TokenGT (Kim et al., 2022)	$\mathcal{O}(n^2)$	0.0910
EGT (Hussain et al., 2022)		0.0869
GRPE (Park et al., 2022)		0.0867
Graphormer (Ying et al., 2021a; Shi et al., 2022)		0.0864
GraphGPS (Rampášek et al., 2022)		0.0858
GPS++ (Masters et al., 2022)		0.0778
Transformer-M (Luo et al., 2023)		0.0787
GEM-2 (Liu et al., 2022a)	$\mathcal{O}(n^3)$	0.0793
Uni-Mol+ (Lu et al., 2023)		0.0708*
GeoMFormer (ours)	$\mathcal{O}(n^2)$	0.0734*

Equivariant: N-body Simulation (Position Prediction)

Table 6. Results on N-body System Simulation. We report the official results of baselines. Bold values indicate the best.

Model	MSE ↓
SE(3) Transformer (Fuchs et al., 2020)	0.0244
Tensor Field Network (Thomas et al., 2018)	0.0155
Graph Neural Network (Gilmer et al., 2017)	0.0107
Radial Field (Köhler et al., 2019)	0.0104
EGNN (Satorras et al., 2021)	0.0071
GeoMFormer (ours)	**0.0047**

Paper

https://arxiv.org/abs/2406.16853

Code

https://github.com/c-tl/GeoMFormer